Hydro-Probe Orbiter

product information sheet

The world's first rotating microwave sensor for measurement of moisture and temperature in the mixer.

Hydronix

Hydro-Probe Orbiter

The ROTATING microwave sensor for STATIC pan mixers
The STATIC microwave sensor for ROTATING pan mixers

EVOLUTION THROUGH REVOLUTION

The Hydro-Probe Orbiter is the most innovative microwave sensor ever to reach the market. With an easily replaceable sensing head that slices through the mix, the Orbiter provides a rapid and representative measurement of both the moisture content and temperature of the material. Utilising the latest digital technology, the Orbiter combines accuracy and speed to provide a meaningful reading that is unachievable with static floor mounted sensors.

Key features

- Vastly improved measurement by sensor head cutting through the material, compared to static floor mounted sensors.
- Fast stable sensor readings not affected by mixer blades.
- Rapid response temperature measurement.
- Sensor electronics separated from easily replaceable sensor 'wear' head. Keep a spare on the shelf.
- Easy to install, no cutting holes in mixer floors.
- Variety of models to suit most mixers, including 'no fuss' battery powered cableless sensor.
- Links directly by RS485 to the Hydro-Control V for complete control of the water addition in your mixer.

Benefits

Why is the measurement from a rotating Orbiter so much better than a static floor mounted sensor?

Faster response – the Orbiter provides a much faster response to changes in moisture in the mix, as the sensing head rotates rapidly (typically once every 3 seconds) through the mix – whereas the actual material moves very much more slowly across the face of a floor mounted sensor (typically every 12–15 seconds). This is particularly important when the conditions in the mixer are not homogeneous.

Improved signal, faster reading – with a smooth flow of material across the face of the Orbiter sensing head as it rotates through the mix, and only relatively light filtering is required to make it more meaningful. However, the flow of material over a floor mounted sensor is extremely turbulent and the reading is affected by the movement of the blades and subsequent air pockets. Severe filtering is required to smooth out this 'spiky' reading, with a consequent delay in response.

Improved sampling – measuring in the middle of the mix is more representative than measuring in the bottom layer of the mix. The mixing action close to the floor is typically poor due to the blades not being set correctly (as a result of an uneven floor or simply wear) and hence the moisture content in the bottom 2cms (or 1") will not be representative of the mix as a whole.

Rapid response thermometer – a temperature sensor in the end block of the measuring head provides a fast response reading, enabling temperature correction for adjusting water addition, or for controlling steam heating equipment.

No build up – the Hydro-Probe Orbiter is not affected by uneven mixer floors, the bane of floor mounted sensors positioned in the 'low spots', allowing build up of concrete over the sensor face, thereby obscuring the correct reading of the material above.

Additionally, build up occurs when the blades have not been adjusted correctly, and hence fail to sweep the face of the sensor clean.

Easy to install, no adjustments – the Hydro-Probe Orbiter is easy to install and there is no requirement to cut a hole in the mixer floor. There is no subsequent maintenance, unlike floor mounted sensors, which need adjustment as the floor plates wear.

No maintenance – easy to clean by hosing/brushing at the end of a shift and is less likely to be damaged by striking with a hammer during mixer cleaning, compared to a floor mounted sensor.

Replaceable sensor arm and wear head, no interruption to production – the main sensor body and electronics are positioned out of harms way, and should not have to be changed. The sensing arm with the sensing wear head is available as a replacement item at a realistic price for holding in stock as a spare. Thus when worn or damaged, the sensing arm and head may be changed with minimal disruption to production – if at all.

Systems

Hydro-Probe Orbiter – The Hydro-Probe Orbiter will either interface directly with your batch control system, or:

Hydro-Probe Orbiter with Hydro-Control V for complete control – specifically designed to work together using RS485 communication, this 'duo' provides the fastest and most accurate system, repeatedly producing mixes with consistent moisture contents. The versatility of the 3 different control modes ensures optimum performance is achieved for any application. The equipment is easy to install, easy to use and very cost effective. *(refer to Hydro-Control V information sheet for more details)*.

Rotating connector Type A

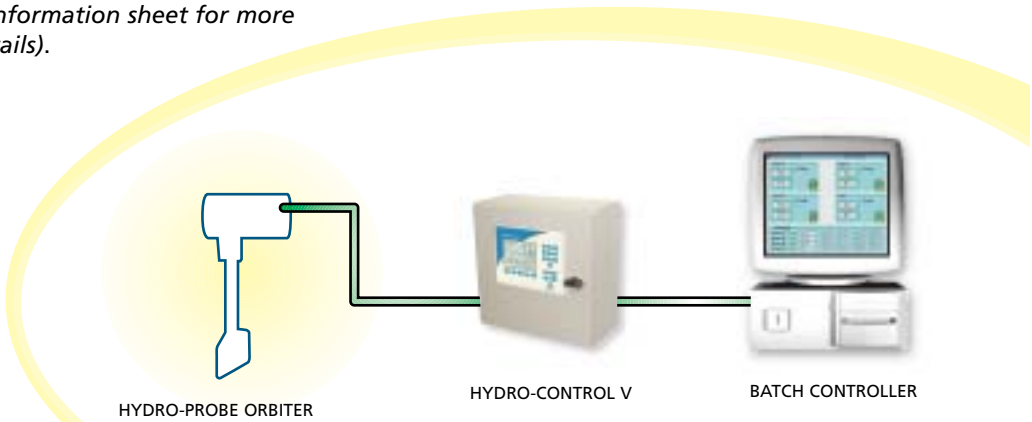

The Hydro-Probe Orbiter with The Hydro-Control V is the perfect combination for controlling the water in your mixer.

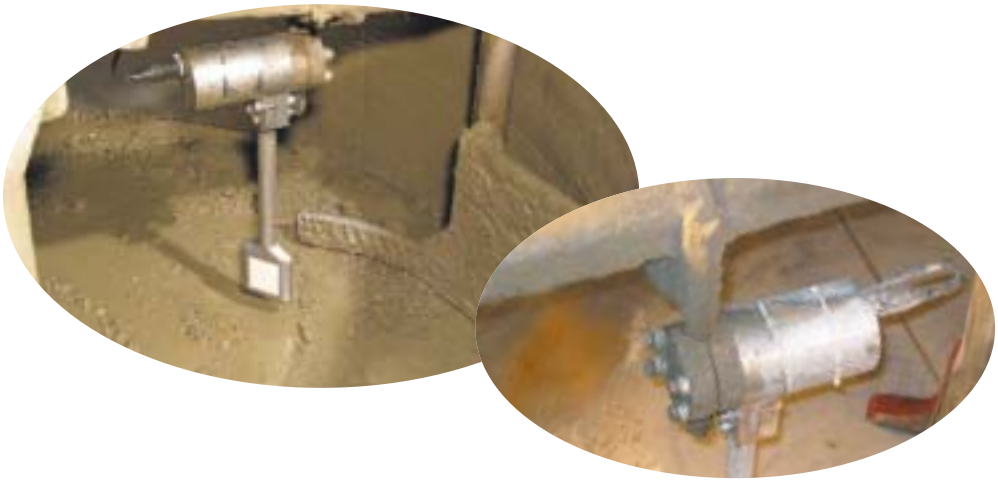

Technical Information

CONSTRUCTION
Body: Stainless Steel (AISI 304)
Sensing head: Hardened stainless steel. Wear resistant surface coating also available.
Faceplate: Alumina ceramic

MOUNTING DETAILS
Sensor typically clamped to vertical 25mm (1 inch) square mild steel bar (supplied by customer) welded to rotating scraper blade arm. Recommended mounting details for both rotating pan and static pan mixers available on request.

MEASUREMENT TECHNIQUE
Hydronix digital resonant microwave technique.

RANGE OF MOISTURE
Sensor will measure up to saturation of material. Usually around 15% in standard concrete mixes, higher in lightweight aggregates.

PENETRATION OF FIELD
Approximately 75-100mm, dependent on material.

POWER SUPPLY
+15V to 30V DC, 4 Watt max.

OPERATING TEMPERATURE
0-60° C. The sensor will not measure in frozen materials.

REFRESH RATE
Outputs are updated approximately 25 times per second.

DIGITAL COMMUNICATIONS
Available for all applications. Opto-isolated. RS485 2-wire port. Refer to your distributor for read/write access to sensor parameters and values.

INPUTS AND OUTPUTS
Available for applications when sensor is static, and connected by standard cable.

Analogue outputs: Two configurable outputs 0-20mA or 4-20mA current loop source available for moisture and temperature. Also may be converted to 0-10 V dc.

Discrete inputs/outputs: Two inputs available for 'batch average', start/stop or moisture temperature multiplexing. One output available to indicate 'out of range'. Refer to manual for further information.

GROUNDING
The sensor body is connected to the cable shield. Ensure equipotential bonding of all exposed metalwork. In areas of high lightening risk correct and adequate protection should be used.

EXTENSION CABLE
When using standard cable connection with static sensor applications:

Cable: Six twisted pairs (12 cores total) screened (shielded) cable with 22 AWG, 0.35mm² conductors

Screen (shield): Braid with 65% minimum coverage plus aluminium/polyester foil

Maximum length: 100m, separate to any heavy equipment power cables

For all other applications when using rotating connector or radio modem.

Cable: 4 core with overall screen
Wire size: 16/0.2mm (0.5mm²)
Impedance: 40Ohm/km
Capacitance: 98pF/m

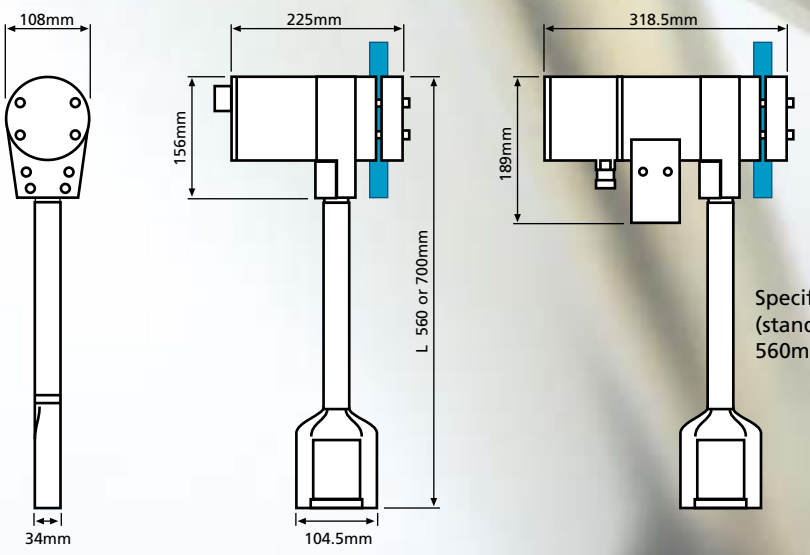

Specify length required (standard lengths are 560mm and 700mm)

DIMENSIONS

ORB1 Housing: 156 x 225mm.

ORB1MB Housing: 189 x 318.5mm.

Sensor arm: 104.5 x 34mm.
(Length of sensor arm to suit mixer)

The Hydro-Probe Orbiter Range

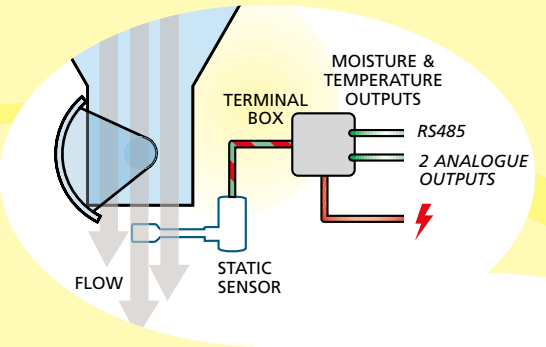

ORB1 The standard model that can be directly connected by a cable, when either STATIC in a ROTATING pan mixer, or through a rotating connector mounted centrally above the mixer when sensor ROTATES in a STATIC pan mixer.

ORB1 – Static sensor – for conveyor belts – or materials in free fall

The abrasion resistance of the sensing head is significantly greater than that of the standard Hydro-Probe and therefore may be more suitable for applications with very abrasive materials. The sensing head and arm can be changed easily, rather than replacing the entire sensor.

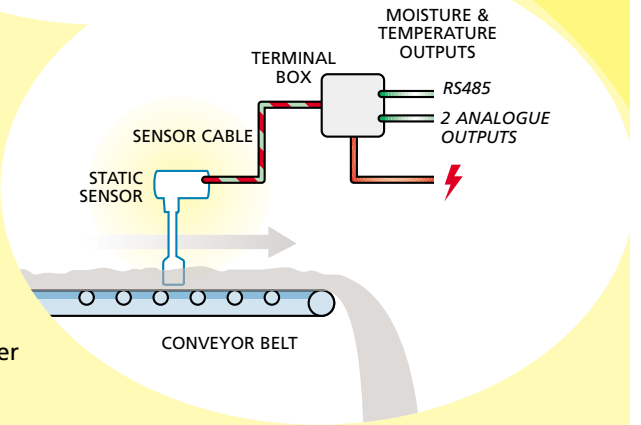

ORB1 – Static sensor – for rotating pan mixers

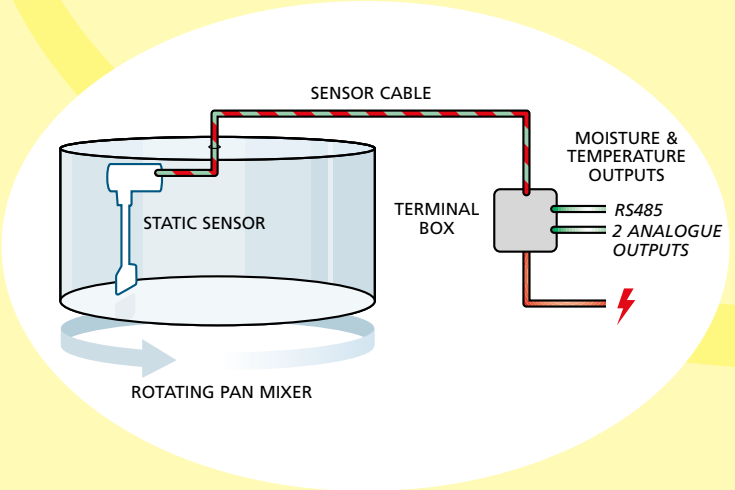

ORB1 – rotating sensor with rotating connector – for planetary and turbo mixers with 'hollow' central drive shafts.

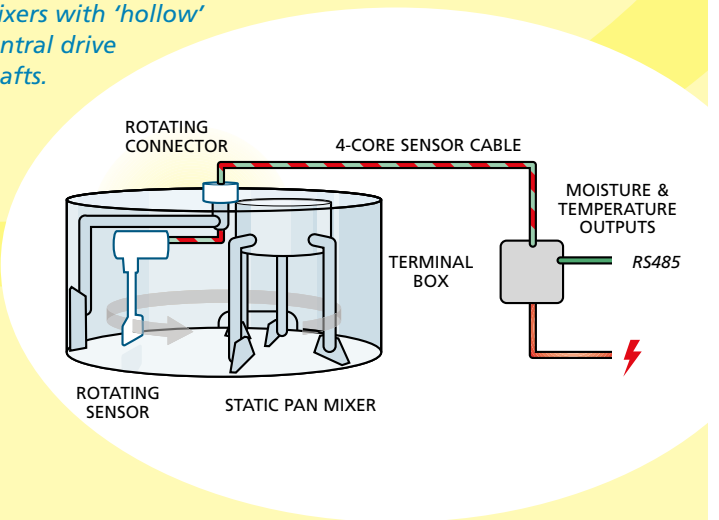

Hydronix regrets that this item is no longer available

ORB1MB For applications where a wired connection is not possible. A rechargeable battery pack provides the power and data is communicated via a radio modem, fixed to the top of the mixer. This option includes a dedicated battery charger and the radio modem transceiver.

Radio Modem Transceiver

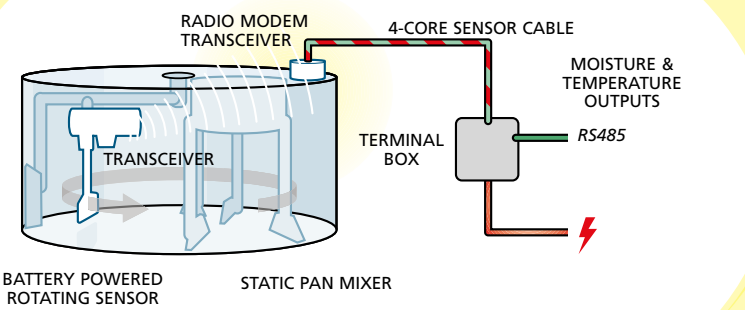

OPTIONS

Sensing Arms:
for ORB1 and ORB1MB available in various lengths. Current standard lengths (length L in diagram) 560mm or 700mm. Other lengths can be made to order, information on request.

Wear Bands:
for ORB1 and ORB1MB. Easily replaceable wear bands that protect the most vulnerable wear areas dramatically extend the wear life of the sensor – sold in pairs.

Rotating connectors:
for ORB1 (order code ORBR1), 4-way mercury rotating connector housed in a robust nylon assembly suitable for use on static pan mixers with central hole. Supplied with blank nylon fixing flange and integral junction box

Other accessories for ORB1MB:
Additional battery pack (ORBB1)
Battery charger for ORBB1 battery pack (ORBC1)

NOTES

1. The sensor body should be as far above the surface of the mix as possible to keep it out of harm's way. Hence determine the maximum length (dimension L) possible for your mixer, ensuring there is sufficient clearance (headroom) as the sensor rotates through the mixer.

2. With rotating pan mixers it is preferable to specify the length of the arm such that the body of the sensor is above the lid of the mixer.

HOW TO ORDER

For further information, please contact the appropriate Hydronix office, or your nearest dealer. If possible, please have available the make, type and size of mixer for the application in mind so that we can provide you with the correct information.

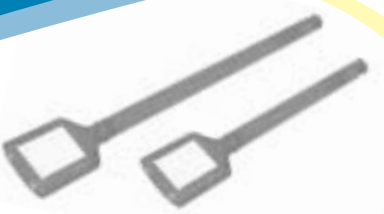

Various lengths of sensing arm are available depending on the mixer type and mounting position.

Hydronix regrets that this item is no longer available

Orbiter can be mounted on mixer's scraper blade arm, via a steel plate welded to square steel 25mm support bar (not supplied)

ORB1MB
Battery powered, wireless modem

ORB1
Hard-wired with rotating connector

Hydronix

Head Office:
7 Riverside Business Centre
Walnut Tree Close
Guildford, Surrey GU1 4UG
England

Tel: +44 (0)1483 468900
Fax: +44 (0)1483 468919

Central Europe:
Tel: 00 49 2563 4858
Fax: 00 49 2563 5061

Americas:
Tel: 888-887-4884 (toll free) or 231-439-5000

Fax: 888-887-4822 (toll free) or 231-439-5001

www.hydronix.com

Information given is correct at the time of publication. Hydronix reserve the right to modify and change the specification as deemed appropriate without notification.

Hydronix, Hydro-View, Hydro-Probe Orbiter, Hydro-Mix and Hydro-Control are Trade Marks of Hydronix Limited.

April 2003